DF481101F

Included accessories

1 x baking tray spray head
1 x GN container insert
1 x holder for long-stemmed glasses
1 x stainless steel trim kit

Optional accessories

DA042030:
Silver polishing cassette

DA043000:
Holder for long-stemmed glasses

GZ010011:
inlet and outlet hose extention

installation accessories

GZ010011:
inlet and outlet hose extention

Dishwasher 400 series
60 cm, Variable hinge
DF481101F

- Flexible basket system with smooth running rails and cushioned closing of the upper and lower basket
- Push-to-open function for perfect integration into handleless furniture fronts
- 8 programmes with aqua sensor and 4 options, such as Power for cleaning and drying dishes from 57 minutes and Intensive Plus for adjusting cleaning areas in the lower basketOptimal protection for sensitive glassware by low temperature drying with zeolite, elaborated basket design and intelligent water softening

8 programmes with aqua sensor and 4 options, such as Power for cleaning and drying dishes from 57 minutes and Intensive Plus for adjusting cleaning areas in the lower basket
Flexible basket system with smooth running rails on all levels and cushioned closing of the upper and lower basket
Perfectly illuminated interior
Push-to-open function for perfect integration into handleless furniture fronts
Flexible hinge for reduced plinth height as of 50 mm or tall unit installation
Lateral Info-Light
Very quiet: 43 dB

Handling
TFT display indicating remaining or end time, refill for salt and rinsing agent, inflow of water.
Touch key operation.
Flexible cycle time reduction, even during an active cycle.
Personalisation function for saving individual combinations of programmes.
Drying assistant for optional door opening at the end of the programme.
Information key with use indications.
Time delay up to 24 hours.
Visual and acoustic end of programme indicator.
Lateral Info-Light.

Features
Perfectly illuminated interior.
Glass protection with zeolite.
Aqua sensor.
Load sensor.
Automatic detergent function.
Regeneration electronics.
Heat exchanger.
Continuous flow heater.
Triple filter system, self-cleaning.
Soft lock.
Aqua stop.

Selected digital services (Gaggenau Home Connect)
Programme Intelligent for adapting a cycle based on user feedback.
Programme assistant.
Downloadable programmes.
Temporary noise reduction.
Software updates.
Integrated WiFi module for digital services (Home Connect).

The availability of the Home Connect functionality depends on the availability of the Home Connect Services in your country. Home Connect Services are not available in every country – for further information please check: www.home-connect.com

Programmes
8 programmes:
Auto 35 °C - 45 °C.
Auto 45 °C - 65 °C.
Auto 65 °C - 75 °C.
Intensive 70 °C.
Eco 50 °C.
Night programme.
Quick wash 45 °C (35 min.).
Personalisation function (default setting: Pre-rinse).
4 options:
Intensive Plus.
Power.
Half Load.
Hygiene.
Machine Care.

Interior
Flexible basket system with smooth running rails on all levels and cushioned closing of the upper and lower basket.
Upper basket:
Over extension.
Optional extra cleaning area by activating additional spray nozzles.
Rackmatic with 3 levels, adjustable in height up to 5 cm.
6 folding spines.
4 folding racks for optimal protection of glass.
Lower basket:
Motorised spray arm.
8 folding spines.
2 folding racks for optimal protection of glass.
Dividable glass support.
Cutlery basket.
Maximum dish sizes (upper/lower basket) 29/28, 26.5/30.5 or 24/34 cm respectively.
12 place setting capacity.
Maximum glass loading capacity 23 wine glasses.

Product rating
Energy efficiency class B at a range of energy efficiency classes from A to G.
From 9.5 l water.
From 0.626 kWh.
Noise level 43 dB (re 1 pW).

Planning notes
Height-adjustable feet.
Appliance plinth recess 100 mm (see drawing).
Rear feet adjustable at front.
Door weight up to 11 kg.
Door panel dimension dependent on plinth height of kitchen furniture.
Installation and usage also with furniture handle possible. The push-to-open function remains active.

Connection
Total connected load 2000-2400 W.
Connecting cable plugable.
Water connection with 3/4 " screw joint.

Connection to hot or cold water possible.
Power consumption standby/network 2 W.
Time auto-standby/network 2 min.
Please check the user manual for how to switch off the WiFi module.

measurements in mm

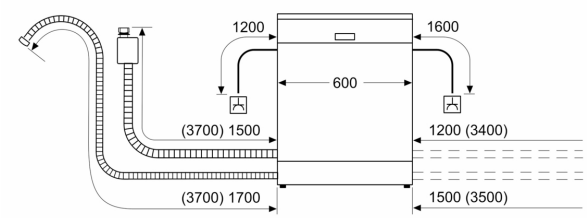

socket
( ) values with extension kit

Connection dimensions for a 60 cm wide dishwasher

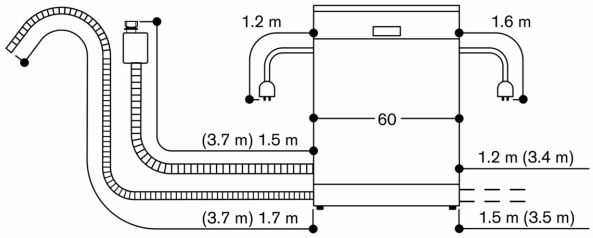

( ) values with extension kit
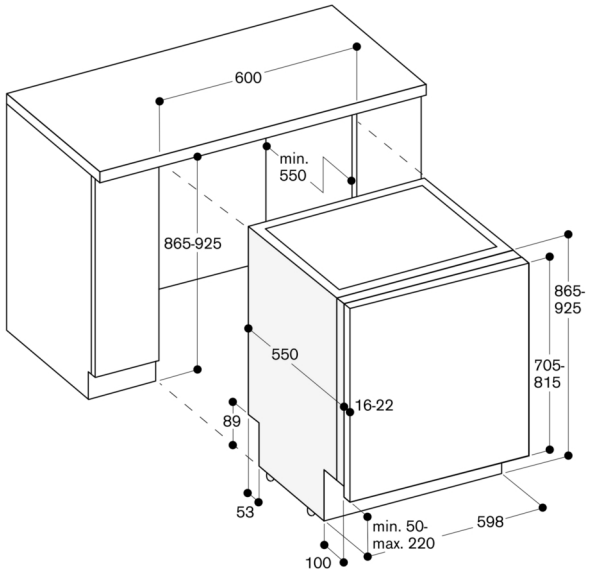
86.5 cm high dishwasher with flexible hinge