RW222263

Optional accessories

RA050220:
Carbon airfilter

wine climate cabinet 200 series
122 x 56 cm
RW222263

- Humidity level can be increased to avoid drying out of cork
- Two independently controllable climate zones from 5° to 20°
- Extendable bottle trays in beech and aluminium
- Consistant temperatures with exact control from +5 °C to +20 °CTwo independantly controllable climate zones

Consistant temperatures with exact control from +5 °C to +20 °C
Humidity control
Extendable bottle trays in beech and aluminium
Presentation light option
Low-vibration operation
Capacity 48 bottles

Handling
Electronic temperature control with digital display.
Touch keys.
Presentation light option in each climate zone, dimmable.
Interior LED lighting (3000 K) with automatic dimming with opening and closing of door.

Features
Dynamic cold air distribution.
Automatic defrosting with defrost water evaporation.
Cushioned door closing system integrated in door hinge.
1 activated charcoal air filter for both climate zones.
UV-protection.
Open-door and malfunction alarm.
Child lock.

Features
Capacity 48 bottles (based on 0.75 l standard bottles).
6 bottle trays, 4 of which are extendable.
Storage of magnum bottles possible.
LED lighting.
Total volume 159 litres.

Product rating
Energy efficiency class G at a range of energy efficiency classes from A to G.
Energy consumption 151 kWh/year.
Noise level 32 dB (A) re 1 pW.

Planning notes
Flat hinge.
Door hinge right, reversible.
Height-adjustable feet.
Door opening angle of 115°, fixable at 90°.
Max. door panel weight 20 kg.
Door panel thickness min. 16 mm/ max.22mm.
The main socket needs to be planned outside of the niche.
For a side-by-side installation every appliance must be planned in its own niche.
The wine climate cabinet can be combined with a second wine climate cabinet or a freezer (RF 287 or RF 282) only. If combining the wine climate cabinet with other cooling appliances (RC, RT, RB), a clearance of min. 150 mm is to be kept between the appliances to avoid condensation.
No transport/operation above 1.500 m sea level.

Connection
Total connected load 0.130 KW.
Connecting cable 2.0 m with plug.

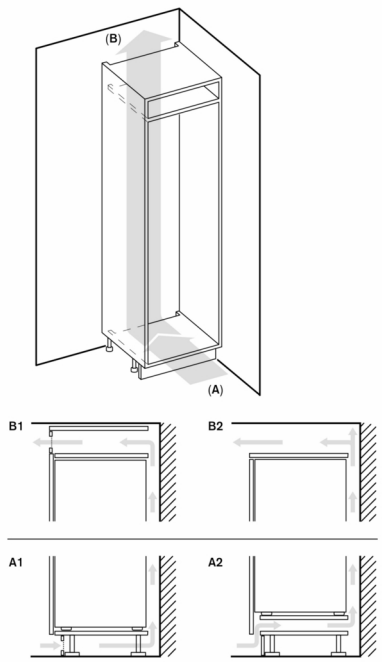

A: Air inlet ≥ 200 cm²; ventilation options A1 or A2

B: Air outlet ≥ 200 cm²; ventilation options B1 or B2

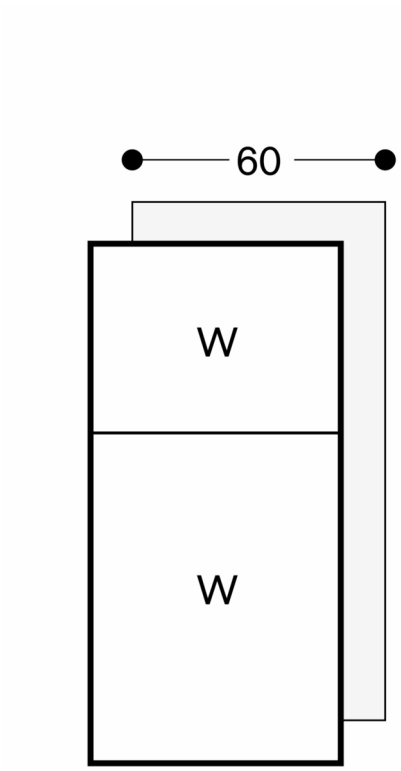

Bottle storage

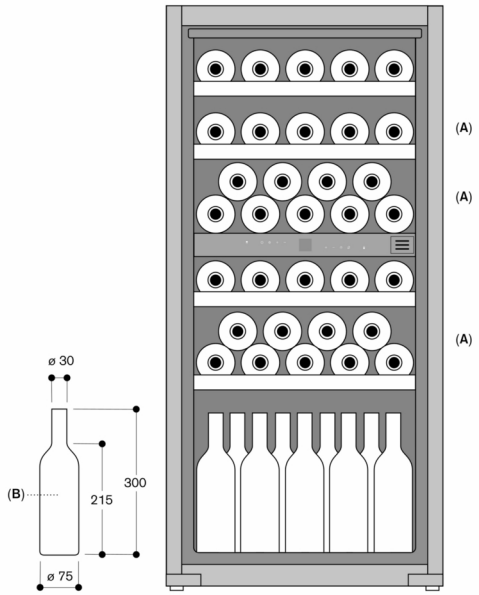

A: Suitable area for storage of magnum bottles in standard tray configuration

B: 0.75 litres
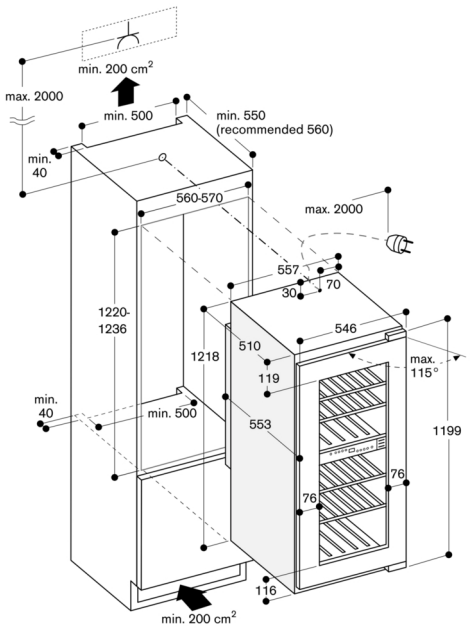
Measurements in mm