RW414365

Included accessories

1 x connection set

installation accessories

RA425110:
Vario SS handle 1131 mm

Vario wine climate cabinet 400 series
213.4 x 45.7 cm
RW414365

- Five preset lighting scenarios
- High-quality interior for optimum wine presentation
- Humidity controlTwo independantly controllable climate zones

Consistant temperatures with exact control from +5 °C to +20 °C
Humidity control
Stainless steel interior
Fully extendable bottle trays in oak wood and solid aluminium in anthracite
Bottle trays with hidden telescopic rails
Warm white and glare-free LED light spots
5 preset lighting scenarios, selectable via TFT display
Opening assist for door with two options:
1. Push-to-open function for integration into handleless furniture front
2. Pull-to-open function to facilitate opening the door using a handle
Low-vibration operation
TFT touch display
Capacity 70 bottles

Handling
TFT touch display operation.
Clear text display.
Lockable door (with door lock RA 420 010).

Features
Dynamic cold air distribution.
Automatic defrosting with defrost water evaporation.
Cushioned door closing system.
Activated charcoal air filter.
UV-protection.
Rest mode certified by Star-K.
When rest mode is active, the appliance can only be opened using a handle.
Open-door and malfunction alarm.

Selected digital services (Gaggenau Home Connect)
Remote control and monitoring.
Remote diagnostics.
Light scenarios.
Integrated WiFi module for digital services (Home Connect).
The availability of the Home Connect functionality depends on the availability of the Home Connect Services in your country. Home Connect Services are not available in every country – for further information please check: www.home-connect.com

Features
Capacity 70 bottles (based on 0.75 l standard bottles).
12 bottle trays,
- 10 fully extendable trays
- 3 suitable for storage of Magnum bottles.
Flexible interior configuration possible by adding or removing fully extendable bottle trays.
Storage of up to 6 Magnum bottles with standard tray configuration (12 bottle trays).
Space for max. 13 bottle trays.
2 brilliant LED light spots with warm white, glare-free light (3500 K) in each climate zone.
5 different lighting scenarios can be selected for individual wine presentation.
Total volume 272 litres.

Product rating
Energy efficiency class G at a range of energy efficiency classes from A to G.
Energy consumption 145 kWh/year.
Noise level 42 dB (A) re 1 pW.

Planning notes
Flat hinge.
Door hinge right, reversible.
Door opening angle of 115°, fixable at 90°.
Max. door panel weight 76 kg.
The main socket needs to be planned outside of the niche.
No Transport/operation above 2000m sea level

Connection
Total connected load 0.300 KW.
Connecting cable 3.0 m, pluggable.

Bottle storage

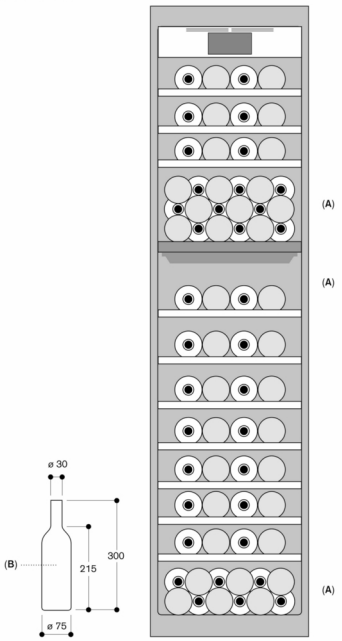

A: Suitable area for storage of magnum bottles in standard tray configuration

B: 0.75 litres

Measurements in mm

Door opening angle

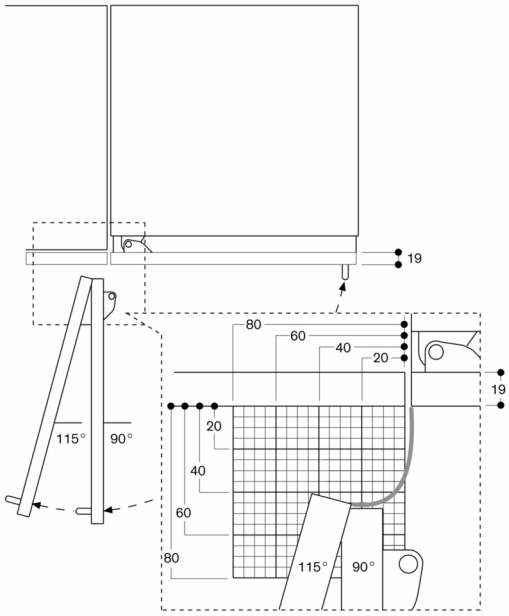

The hinge travel and resulting clearances from adjacent furniture units and handles can be found from the drawing while allowing for the thickness of the front panel. In the drawing, a furniture unit front panel thickness of 19 mm was assumed.

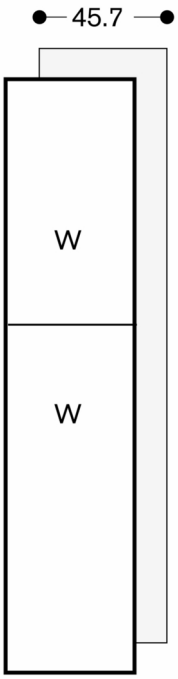

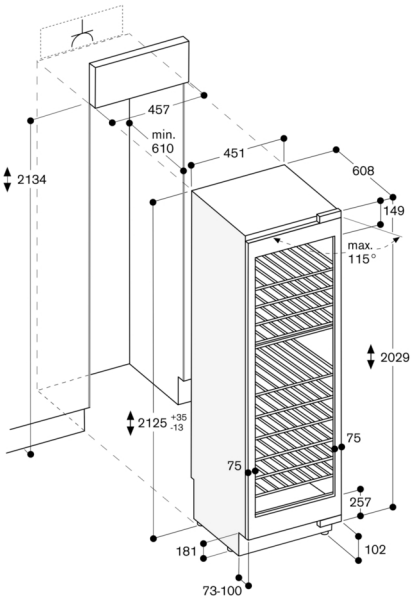

The maximum door panel dimensions are based on a clearance of 3 mm.

Wall clearance RB 472/RC/RF/RW

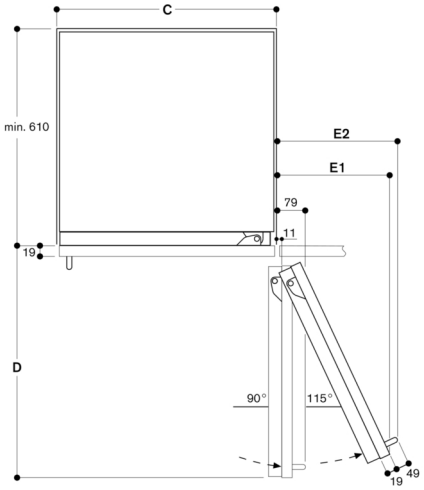

Recess width

C	D	E1	E2
457 mm	525 mm	235 mm	265 mm
610 mm	677 mm	299 mm	330 mm
762 mm	830 mm	364 mm	395 mm
914 mm	980 mm	428 mm	460 mm

In the drawing, a unit front thickness of 19 mm and a Gaggenau unit handle of 49 mm were taken as a basis.

Base detail

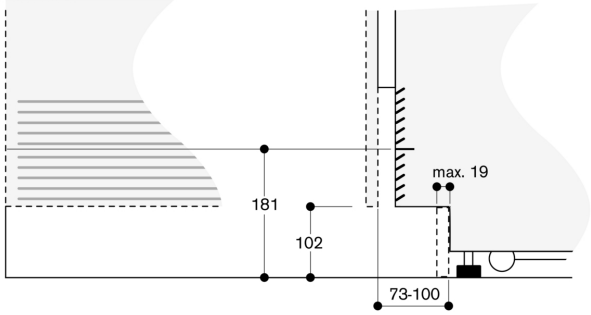

Based on the standard appliance height, the height of the plinth is 102 mm. Maximum plinth thickness 19 mm.