RB492305

Optional accessories

RA430100:
Storage container with lid, anthracite

RA450012:
Water filter Vario 400

installation accessories

RA425110:
Vario SS handle 1131 mm

RA425910:
Vario SS handle 810 mm

RA460030:
Frontpanel connection for RB

Vario fridge-freezer combination 400 series
213.4 x 91.4 cm
RB492305

- Stainless steel interior with solid anthracite aluminium elements
- Opening assist for door with two options
- Immerse your kitchen in a mesmerizing glow with Gaggenau´s Glare-Free LED Light Spots and showcase your dishes like never before.
- Fresh cooling drawer close to 0 °CStainless steel interior with solid anthracite aluminium elements

Warm white and glare-free LED light spots
Opening assist for door with two options:
1. Push-to-open function for integration into handleless furniture front
2. Pull-to-open function to facilitate opening the door using a handle
Flat stainless steel inner door, full-length
Smooth design rail system providing flexible positioning for shelves and door racks
Solid anthracite aluminium door racks
One fresh cooling drawer close to 0 °C with manually adjustable temperature and one fresh cooling drawer with manually adjustable humidity
Integrated ice maker with fixed inlet water connection
Fully extendable freezer drawer with practical divider in anthracite
TFT touch display
Total volume 555 litres

Handling
TFT touch display operation.
Clear text display.

Features
Dynamic cold air distribution.
Automatic defrosting with defrost water evaporation.
Cushioned door closing system.
Activated charcoal air filter.
Rest mode certified by Star-K.
When rest mode is active, the appliance can only be opened using a handle.
Open-door and malfunction alarm.

Selected digital services (Gaggenau Home Connect)
Remote control and monitoring.
Remote diagnostics.
Integrated WiFi module for digital services (Home Connect).
The availability of the Home Connect functionality depends on the availability of the Home Connect Services in your country. Home Connect Services are not available in every country – for further information please check: www.home-connect.com

Cooling
No-frost technology with fast cooling.
Temperature adjustable from +2 °C to +8 °C.
2 safety glass shelves, white glass, individually adjustable in height.
1 integrated shelf.
4 brilliant LED light spots with warm white, glare-free light (3500 K) within cooling area and drawers.
Smooth design door rail system with fully flexible positioning of door racks.
3 height adjustable door racks, 1 of which is extra deep.
Total volume all refrigerator compartments 389 litres.

Fresh cooling close to 0 °C
1 fully extendable fresh cooling drawer close to 0 °C with transparent front, illuminated.
Cushioned closing system.
Temperature can be adjusted manually.
Ideal for meat, fish and poultry.

Fresh cooling
1 fully extendable fresh cooling drawer with transparent front, illuminated.
Cushioned closing system.
Humidity can be adjusted manually.
Ideal for fruit and vegetables.

Freezing
No-frost technology with fast freezing at -30 °C.
Temperature adjustable from -14 °C to -24 °C.
4-star freezer compartment.
Freezing capacity 14 kg /24 h.
Storage time after a malfunction 13 h.
2 fully extendable drawers, one of them inside.
Outer drawer with synchronously running pull-out rails.
Interior lighting with 2 LED light spots, warm white light.
Volume 166 litres.

Ice maker
Integrated in the freezer compartment, with fixed inlet water connection.
Particle filter for water inlet, integrated in ventilation grille area.
Saturation indicator shown in TFT touch display.
Can be switched off.
Ice cube production approx. 1.6 kg/24 h.
Removable ice storage container with approx. 3 kg capacity.

Product rating
Energy efficiency class E at a range of energy efficiency classes from A to G.
Energy consumption 326 kWh/year.
Noise level 42 dB (A) re 1 pW.

Planning notes
Flat hinge.
Door hinge right, reversible.
Door opening angle of 115°, fixable at 90°.
Max. door panel weight:
Door 47 kg.
Drawer 12 kg.
Shut-off valve for water connection must be planned next to the appliance and always be accessible.
If the water pressure exceeds 0.8 MPa (8 bar), connect pressure relief valve between water tap and hose set.

Connection
Connecting cable 3.0 m, pluggable.
Water inlet.
Supply hose 2.0 m with 3/4 " connection.
Water pressure 2 to 8 bar.

Door opening angle

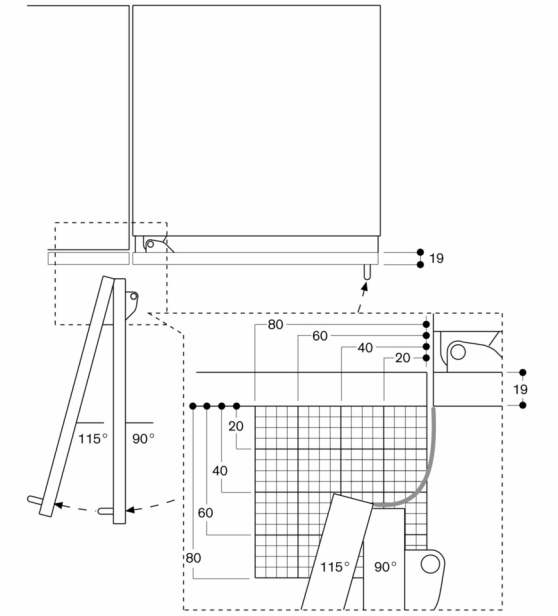

The hinge travel and resulting clearances from adjacent furniture units and handles can be found from the drawing while allowing for the thickness of the front panel. In the drawing, a furniture unit front panel thickness of 19 mm was assumed.

Wall clearance RB 492/RY 492

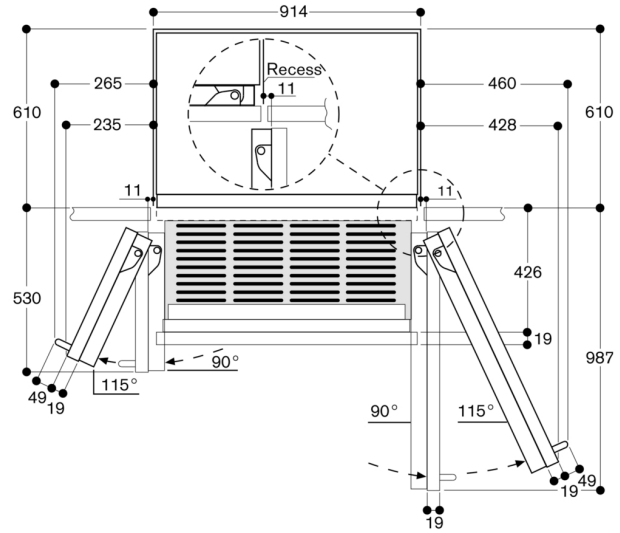

In the drawing, a unit front thickness of 19 mm and a Gaggenau unit handle of 49 mm were taken as a basis.

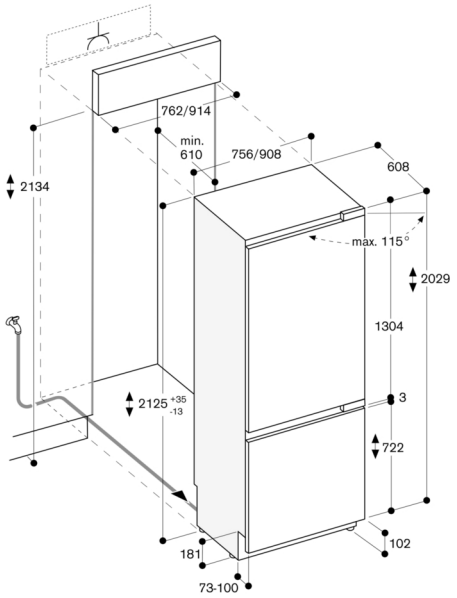

The maximum door panel dimensions are based on a clearance of 3 mm.

Base detail

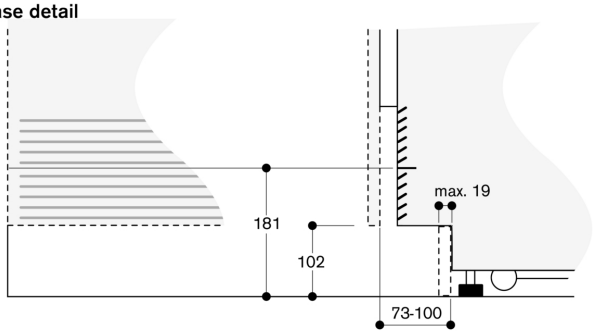

Based on the standard appliance height, the height of the plinth is 102 mm. Maximum plinth thickness 19 mm.

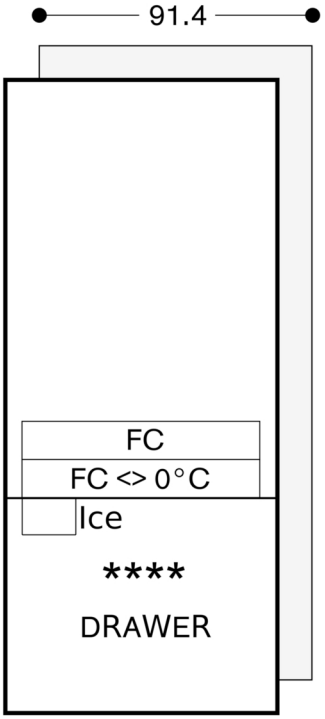
91.4
FC
FC <> 0°C
Ice
****
DRAWER