N 70, INDUCTION HOB WITH INTEGRATED VENTILATION SYSTEM, 80 CM, SURFACE MOUNT WITHOUT FRAME
V58NHQ4L0

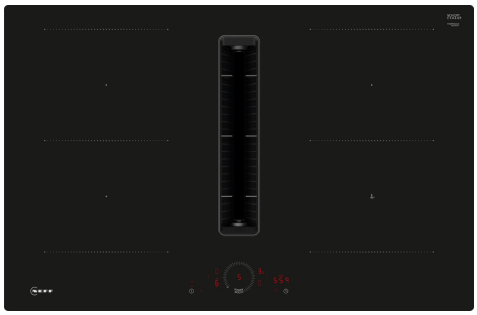

This induction hob with integrated ventilation combines two appliances in one for a clear view while cooking.

- √ Twist Touch®: control your hob with a twist of your finger.
- √ Combi Induction: combine two circular cooking zones when using large cookware.
- √ High Extraction Rate – ensures a clear view while cooking thanks to motor technology.
- √ Reduced Noise – our optimised motor guarantees a quiet cooking experience.
- √ Easy-clean filters – Easy to remove and dishwasher-safe.

Included accessories

1 x Slider for unducted recirculation, 1 x Clean Air Plus odor filter

Optional accessories

Z1365WX0 Wireless food thermometer, Z811DU0 Acoustics Filter, Z821PD1 Plinth Diffusor, Z821VR1 Clean Air Plus odor filter (replacement), Z861KE1 Exhaust kit, Z861KR0 Recirculation kit 2 L-bow (70cm), Z861KR1 Recirculation kit S and L-bow (60cm), Z861SB1 90° flat duct bend horizontal, Z861SB2 90° flat duct L vertical, Z861SB3 90° flat duct M vertical, Z861SB4 90° flat duct S vertical, Z861SI0 Adapter round-flat, Z861SI1 90° Adapter round-flat, Z861SM1 Straight tube 500mm, Z861SM2 Straight tube 1000mm, Z861SS1 Connector sleeve (female), Z861SS2 Flex sleeve (female), Z9401TY0 Teppan Yaki, Z9404SE0 4 pieces Set, Z9406SE0 6 pieces Set, Z9416X2 Griddle Plate, Z9428FE0 Iron pan Ø 18 / 28 cm, Z943SE0 Set of 2 pots and 1 pan

Features

Technical Data

Product name/family: ..... Cooking zone ceramic
Built-in / Free-standing: ..... Built-in
Energy input: ..... Electric
Number of cooking zones: 4
Required niche size for installation (HxWxD): ..... 223 x 750-750 x 490-490 mm
Width of the appliance: ..... 802 mm
Dimensions: ..... 223x802x522 mm
Dimensions of the packed product (HxWxD): ..... 431x950x670 mm
Net weight: ..... 26.5 kg
Gross weight: ..... 31.2 kg
Residual heat indicator: ..... Separate
Location of control panel: ..... Front
Basic surface material: ..... Ceramic
Color of surface: ..... Black
Length electrical supply cord: ..... 110 cm
Sealed Burners: ..... No
heating with booster: ..... All
Power of 2nd heating element (kW): ..... 3600.0 W
Number of speed settings: ..... 9-stage + 2 intensive
Maximum output air extraction: ..... 500 m³/h
Boost position output recirculating: ..... 595.0 m³/h
Maximum output recirculating air: ..... 487 m³/h
Boost position air extraction: ..... 622 m³/h
Noise level: ..... 69 dB(A) re 1 pW
Odour filter: ..... No
Clean filter reminders: ..... Yes
Voltage: ..... 220-240/380-415 V
Frequency: ..... 50-60 Hz
Included accessories: ..... 1 x Slider for unducted recirculation, 1 x Clean Air Plus odor filter

4 242004 277477

N 70, INDUCTION HOB WITH INTEGRATED VENTILATION SYSTEM, 80 CM, SURFACE MOUNT WITHOUT FRAME
V58NHQ4L0

Features

- 80 cm: space for 4 pots or pans.

Flexibility of cooking zones

- 2 Combi zones
- : use bigger cookware by connecting two classic cooking zones into one large zone.
- Cooking zone front left: 190 mm, 210 mm, 2.5 KW (max. power 3.7 KW)
- Cooking zone rear left: 190 mm, 210 mm, 2.5 KW (max. power 3.7 KW)
- Cooking zone rear right: 190 mm, 210 mm , 2.5 KW (max power 3.7 KW)
- Cooking zone front right: 190 mm, 210 mm, 2.5 KW (max. power 3.7 KW)

Usage convenience

- Twist Touch®: directly control the power with the imprinted touch ring.
- Favourite Button: directly access favourite functions with a configurable button (available with connected Home Connect account).
- Variable 17-stage power settings for each zone: precisely adapt the heat with 17 power levels (9 main levels and 8 intermediate levels).
- Keep warm function: via HC app/MyButton: Keep dishes warm at preset low power level.
- Switch-off timer: switches off the cooking zone at the end of the time set (e.g. for boiled eggs).
- Count-down-timer (can be chosen instead of switch-off timer): an alarm sounds at the end of the time set (e.g. for pasta).
- Sound volume adaptable to personal preference and needs.

Time saving & efficiency

- Power Boost function for all zones
- : boil water faster thanks to 50% more energy than at the highest standard level.
- Pan boost, selectable via Favourite button/Home Connect App (for appliances connected to Home Connect account): heat up pans faster than at the highest standard level while protecting the pan coating.
- QuickStart function: when switching on, the hob automatically selects the cooking zone with cookware (when placed on a zone whilst the hob is off).
- ReStart function: in case of unintentional switch-off, this feature restores all previous settings by switching on the hob again within 4 seconds.

Cooking assistance

- Extended Frying Sensor: prevents overcooking with the automatic temperature regulation of the integrated sensor.
- Dish assistant: easily find the right temperature setting for a certain dish via the home connect app.

Connectivity

- Home Connect with Remote Monitoring: check if the hob is switched off even when not at home, and find recipes or additional functions in the Home Connect app.
- Smart home trigger, via Favourite button (available with connected Home Connect account): open up the smart universe from your cooktop (partner service required).
- Updateable appliance (available with connected Home Connect account): keep appliance always up to date with latest status of software. Updateable appliance (available with connected Home Connect account): keep appliance always up to date with latest status of software.

Design

- Frameless

Safety

- 2 stage residual heat indicators: indicates which cooking zones are still hot or warm.
- Control panel lock: prevent unintended activation of the hob.
- Main switch: switch off all cooking zones at the touch of a button.
- Safety cut out facility: for safety reasons, heating stops after a preset time if not used.

Installation

- Dimensions of the product (HxWxD mm): 223 x 802 x 522
- Required niche size for installation (HxWxD mm) : 223 x 750 x (490 - 490)
- Min. worktop thickness: 16 mm
- Connected load: 7.4 KW
- 4.6kW power output (20A); current management options for 16A, 13A or 10A connection: limit the maximum power if needed (depends on fuse protection of electric installation).
- Power cord: 1.1 m, Cable included in packaging

Accessories

- Clean Air Plus odor filter, Slider for unducted recirculation included
- Suitable for installation into a 60 cm base cabinet

Integrated ventilation downdraft system

- Induction cooktop with fully integrated high-performance downdraft extractor.
- Suitable for ducted or recirculated extraction configuration (incl. differentiated software modes). Installation accessories for unducted recirculation, among these four cleanAir odor filters and a telescopic slider element, are included in the cooktop. Accessories for other installation options are available, details in the planning notes.
-
- Aesthetically integrated fully flush air intake design with floating, heat resistant glass ceramics element for free movement and placement of cookware.
- - Automatic switch-on of ventilation system when a cooking zone is used.
- - Automatic delayed shut-off after cooking to erase residual odors after cooking (in specific ultra low-noise fan level, 12min in ducted extraction, 30min in recirculated extraction, can be shut-off manually).

Features

- High-performance, low-noise blower with efficienct BLDC-technology. High extraction rates at very low noises with pleasant noise frequencies through psycho-acoustically and aerodynamically optimised interior with enclosed, non-visible blower. Highly pressure drop resistant even with longer and more complex ductings.
- Easy-to-detach and easy-to-clean grease filter and liquid collector unit:
- - Convenient one-hand removal of unit via floating glass ceramics handle.
- - Integrated, large-scale, high performance stainless-steel grease filters with 12 filtration layers and one black top layer for enhanced aesthetical integration. Grease filtration efficiency of 94 %.
- - All parts of the unit are easy-to-clean, fully dishwasher safe and heat resistant.
- - (Upper) Liquid collector unit with 200ml of capacity for standard accidental spillages or cooking condensate.
- - Powerful drainage system for spillages that exceed 200ml of liquids.
- - Liquid safety collector with additional capacity of 700ml for more severe accidental situations. Dishwasher safe. Easily accessible and detachable from below.
- - Overall capturing capacity of 900ml (200ml + 700ml).
- - Watertight blower system.
- Ventilation system performance:
- - Extraction performance in ducted extraction (according to EN 61591): min. normal setting 154 m3/h , max. normal setting 500 m3/h , max. Boost-/Intensive setting 622 m3/h .
- - Extraction performance in recirculated extraction (according to EN 61591): min. normal setting 117 m3/h , max. normal setting 487 m3/h , max. Boost-/Intensive setting 595 m3/h.
- - Noise level in ducted extraction (Sound power level according to EN 60704-3): min. normal setting 42 dB re 1 pW, max. normal setting 69 dB re 1 pW, max. Boost-/Intensive setting 74 dB re 1 pW.
- - Noise level in recirculated extraction (Sound power level according to EN 60704-3.): min. normal setting 41 dB re 1 pW, max. normal setting 68 dB re 1 pW, max. Boost-/Intensive setting 72 dB re 1 pW.
- - Grease filter efficiency (according to EN 61591) 94 %.
- Consumption data and energy efficiency (according to Regulation (EU) No 65/2014):
- - Energy Efficiency Class: B (at a range of energy efficiency classes from A+++ to D).
- - Fluid Dynamic Efficiency: A .
- - Average energy consumption: 57 .
- - Grease filtration effciency class: B .
- - Noise min. normal setting & max. normal setting: 42 dB & 69 dB .
- For recirculation configuration: 2 x 2 battery of directly integrated, high-performance cleanAir odor filters.
- - Optimised odour reduction performance for cooking applications with complex odour molecules (e.g. fish).
- - Large scale filter surface with high odour reduction capabilities.
- - Anti-pollen functionality: The filter retains an extremely high amount of airborne pollen and deactivates allergens which are retained by the filter.
- - Lifetime of 360 hours of cooking (non-regenerative).
- - Low-noise filters with optimised psycho-acoustics.
- - Easy-to-access and easy-to-remove from above.
- - Replenishment cleanAir filter set Z821VR0.
- For ducted extraction configuration: 2 x 2 sets of directly integrated, high-performance low-noise acoustic filters for significantly lower noise and improved psycho-acoustics.

Planning & installation notes

- Suitable for ducted or recirculated extraction installations in 4 different options (unducted, partly and fully ducted recirculation or ducted extraction). Installation accessories for unducted recirculation, among these four cleanAir odor filters and a telescopic slider element, are included in the cooktop. The included accessories allow easy and quick installations and can be planned in all worktop depths ≥60cm. For other types of installation, one of the following accessory kits is recommended:
- Z861KR1 for partly-ducted recirculation in worktops of ≥60cm depth with max. worktop height of 960 mm. Z861KR0 for partly-ducted recirculation in worktops of 70cm depth of ≥70cm depth with max. worktop height of 960 mm.
- Z861KE1 as starter kit for ducted extraction in worktops of ≥60cm depth.
- To complete the fully ducted extraction or to do any other individual recirculation planning different ducting accessories are available.
- Planning suggestions:
- - Installation is possible in island as well as wall oriented configurations.
- The product and its accesories comply with the Needle Flame Test (according to IEC 60695-11-5) and the V2 flammability class (according to UL94).
- - The max. immersion depth is 223 mm below worktop surface.
- - The appliance must be freely accessible from below (i.e. for accessing the lower liquid safety collector).
- - No false floor is necessary below the cooktop with integrated downdraft ventilation system. The drawers and/or shelves in the floor unit must be removable. The backpanel of the floor unit can be kept - only a cut-out for the air outlet is needed (position and size can be taken from the installation instructions).
- An installation with unducted recirculation requires a vertical aperture of min. 25mm behind the backpanel of the furniture. Suggested for ideal performance are 50mm.
- The minimum worktop thickness is 16 mm for top mounted and flush installed appliances with the standard installation system.
- - The overall appliance weight is 26kg - the bearing capacity and stability, in the case of very thin worktops in particular, must be supported using suitable substructures. The overall appliance weight and the worktop manufacturer's structural integrity specifications are to be taken into account.
- - For partly ducted and unducted recirculation extraction installations, a return-flow aperture of ≥400cm² is to be respected in the plinth area. The aperture can be realized via outlet grids, lamella grids or subtly shortened plinths depending on the assortment of the kitchen furniture manufacturer.
- - The air outlet on the backside of the appliance can directly be accessed with a male flat duct element (DN 150).
- - The pressuredrop resistant blower allows longer and more complex ductings up to 8m with three 90° bows while keeping sufficient performance.
- - When installing a ventilation hood with ducted extraction and a chimney-vented fireplace, the power supply line of the appliance needs a suitable safety switch. This is not required for configurations in recirculated extraction.

Features

- - In ducted extraction configuration a one-way flap (or backflow trap) with a maximum opening pressure of 65Pa should be installed.
- Pause function: pause the heating process, e.g to answer the door.

N 70, INDUCTION HOB WITH INTEGRATED VENTILATION SYSTEM, 80 CM, SURFACE MOUNT WITHOUT FRAME
V58NHQ4L0

Dimensioned drawings

measurements in mm

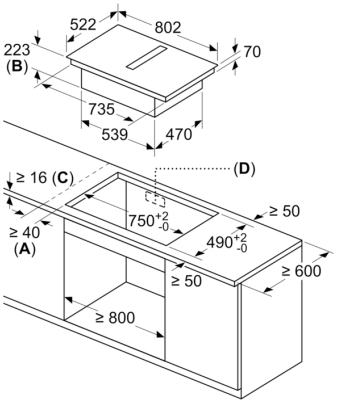

A: Minimum distance from the hob cut-out to the wall
B: Recessing depth
C: The worktop into which the hob is installed must withstand loads of approx. 60kg; suitable substructures must be used if required.
D: Cut-out in back panel required for pipework. Exact size and position can be taken from specific drawing.

measurements in mm

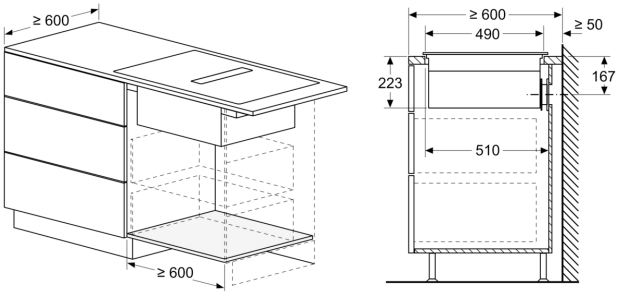

measurements in mm

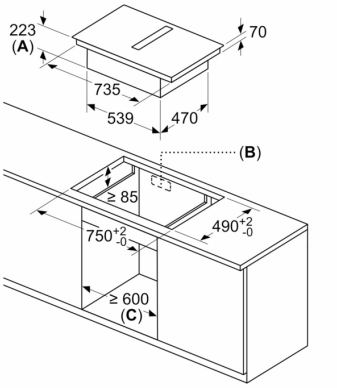

A: Recess depth
B: Cut-out in back panel required for pipework. Exact size and position can be taken from specific drawing.
C: All 80 cm width class models can be installed in 60 cm wide furniture by adjusting the side panels.

Measurements in mm

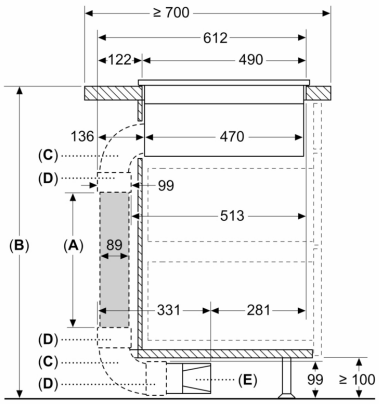

A: Tube length
B: Kitchen height
C: 90° L-size bow
D: Connector sleeve
E: Diffusor

Ducting kit available for ≥ 700 mm depth worktops and up to 960 mm height

The installer has to select the tube length and if necessary cut it according to the kitchen height

A	B
500	≤ 960
1000	> 960

Dimensioned drawings

Measurements in mm

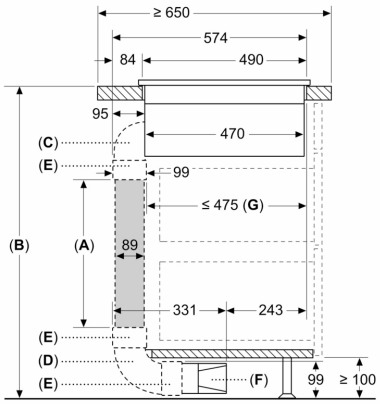

A: Tube length
B: Kitchen height
C: 90° M-size bow
D: 90° L-size bow
E: Connector sleeve
F: Diffusor
G: Shortened Drawer

The installer has to select the tube length and if necessary cut it according to the kitchen height

A	B
500	≤ 940
1000	> 940

Measurements in mm

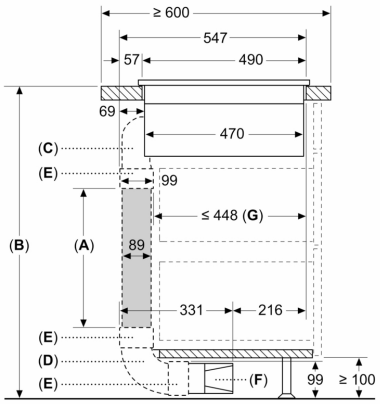

A: Tube length
B: Kitchen height
C: 90° S-size bow
D: 90° L-size bow
E: Connector sleeve
F: Diffusor
G: Shortened Drawer

Ducting kit available for ≥ 600 mm depth worktops and up to 960 mm height

The installer has to select the tube length and if necessary cut it according to the kitchen height

A	B
500	≤ 990
1000	> 990

measurements in mm

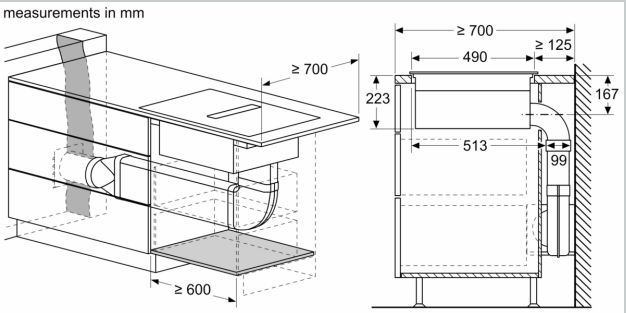

measurements in mm

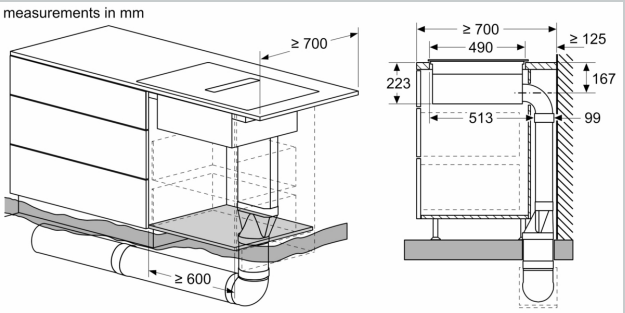

measurements in mm

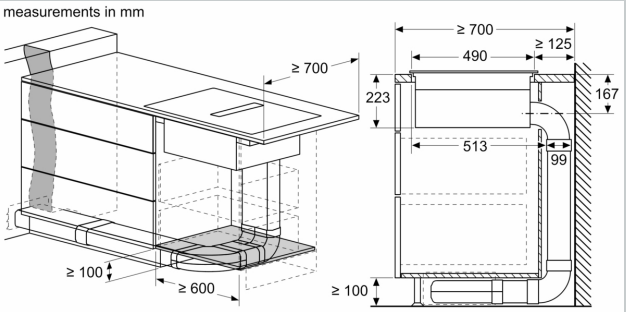

measurements in mm

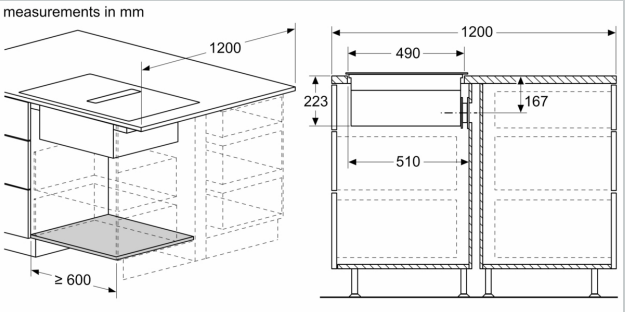

Dimensioned drawings

measurements in mm

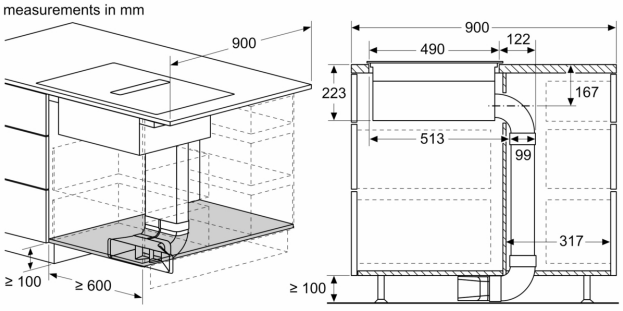

Measurements in mm

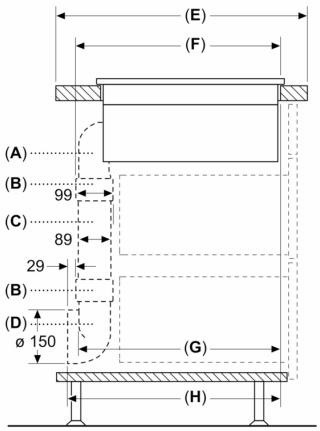

A	E	F	G	H
S-size	≥ 600	547	545	579
M-size	≥ 650	574	569	603
L-size	≥ 700	612	609	643

A: 90° Bow
B: Connector sleeve
C: Straight tube
D: 90° Adapter round–flat

Measurements in mm

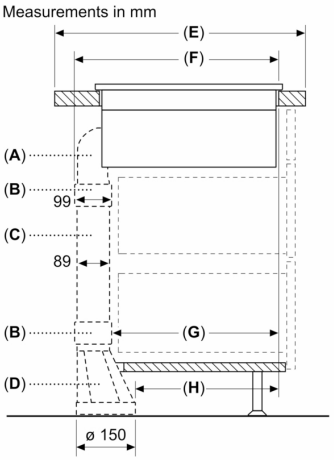

A	E	F	G	H
S-size	≥ 600	547	451	389
M-size	≥ 650	574	475	413
L-size	≥ 700	612	515	453

A: 90° Bow
B: Connector sleeve
C: Straight tube
D: Straight adapter round-flat

Measurements in mm

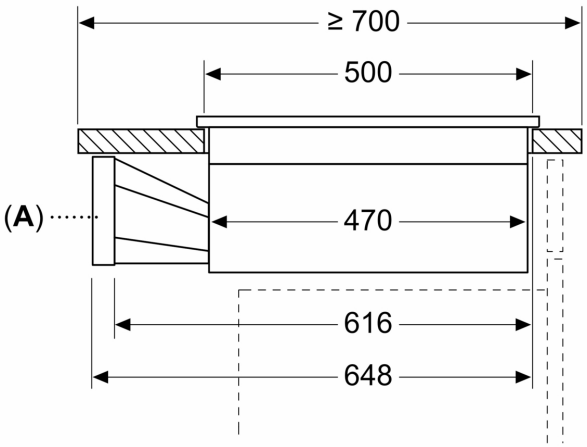

A: Adapter round-flat

Dimensioned drawings

measurements in mm
Front view

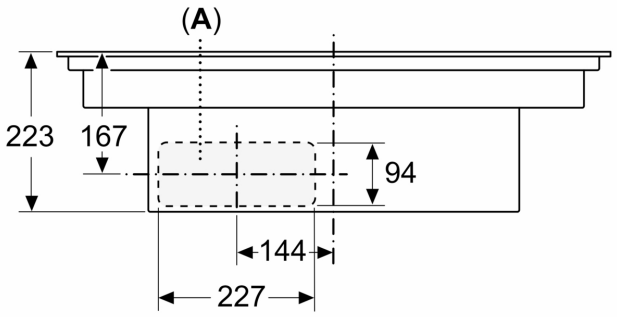

A: Connected directly at the rear

measurements in mm
Front view – unit cut-out
for unducted recirculation

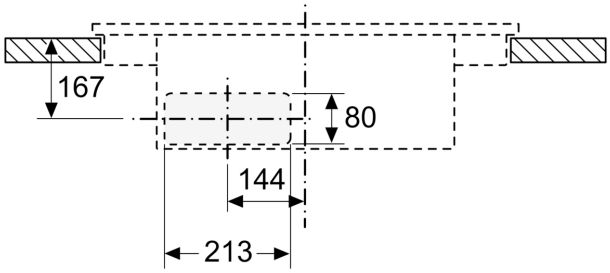

measurements in mm
Side view

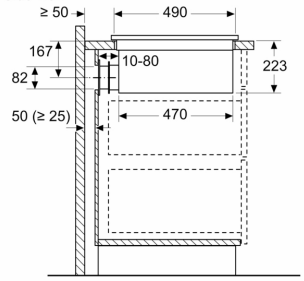

When installing directly against outer walls that are not insulated (μ ≥ 0.5 W/m² °C), we recommend using partially or fully ducted recirculation configurations.
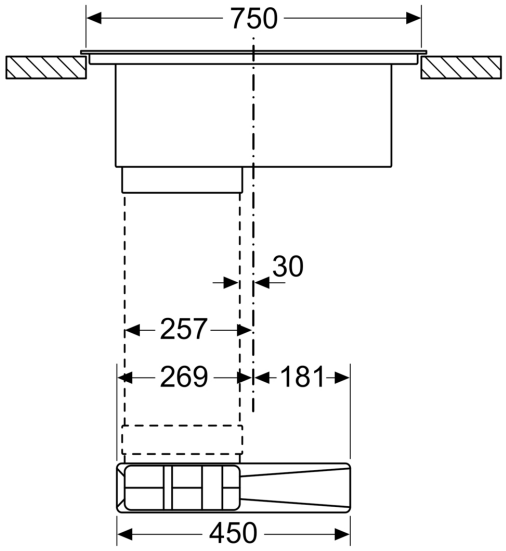
measurements in mm
Front view